MIAMI-DADE COUNTY
PRODUCT CONTROL SECTION
11805 SW 26 Street, Room 208
Miami, Florida 33175-2474
T (786) 315-2590 F (786) 315-2599
www.miamidade.gov/building

DEPARTMENT OF REGULATORY AND ECONOMIC RESOURCES (RER)
BOARD AND CODE ADMINISTRATION DIVISION

NOTICE OF ACCEPTANCE (NOA)

Lawson Industries, Inc.
8501 NW 90 Street
Medley, FL 33166

SCOPE:

This NOA is being issued under the applicable rules and regulations governing the use of construction materials. The documentation submitted has been reviewed and accepted by Miami-Dade County RER - Product Control Section to be used in Miami Dade County and other areas where allowed by the Authority Having Jurisdiction (AHJ).

This NOA shall not be valid after the expiration date stated below. The Miami-Dade County Product Control Section (In Miami-Dade County) and/ or the AHJ (in areas other than Miami-Dade County) reserve the right to have this product or material tested for quality assurance purposes. If this product or material fails to perform in the accepted manner, the manufacturer will incur the expense of such testing and the AHJ may immediately revoke, modify, or suspend the use of such product or material within their jurisdiction. RER reserves the right to revoke this acceptance if it is determined by Miami-Dade County Product Control Section that this product or material fails to meet the requirements of the applicable building code.

This product is approved as described herein, and has been designed to comply with the Florida Building Code, including the High Velocity Hurricane Zone.

DESCRIPTION: Series "SH-7700 (Flange Frame)" Aluminum Single Hung Window – L.M.I.

APPROVAL DOCUMENT: Drawing No. **L7700-0901**, titled "Series-7700 Single Hung Flange Frame Impact Window", sheets 1 through 5 of 5, dated 05/27/09, with revision **G**, dated 09/22/23, prepared by manufacturer, and signed and sealed by Thomas J. Sotos, P.E., bearing the Miami–Dade County Product Control Revision stamp with the Notice of Acceptance number and expiration date by the Miami–Dade County Product Control Section.

MISSILE IMPACT RATING: Large and Small Missile Impact Resistant

LABELING: Each unit shall bear a permanent label with the manufacturer's name or logo, city, state, series, and following statement: "Miami-Dade County Product Control Approved", unless otherwise noted herein.

RENEWAL of this NOA shall be considered after a renewal application has been filed and there has been no change in the applicable building code negatively affecting the performance of this product.

TERMINATION of this NOA will occur after the expiration date or if there has been a revision or change in the materials, use, and/ or manufacture of the product or process. Misuse of this NOA as an endorsement of any product, for sales, advertising or any other purposes shall automatically terminate this NOA. Failure to comply with any section of this NOA shall be cause for termination and removal of NOA.

ADVERTISEMENT: The NOA number preceded by the words Miami-Dade County, Florida, and followed by the expiration date may be displayed in advertising literature. If any portion of the NOA is displayed, then it shall be done in its entirety.

INSPECTION: A copy of this entire NOA shall be provided to the user by the manufacturer or its distributors and shall be available for inspection at the job site at the request of the Building Official.

This NOA **revises NOA No. 22-0719.01** and consists of this page 1 and evidence pages E-1, E-2, E-3, E-4 and E-5, as well as approval document mentioned above.

The submitted documentation was reviewed by **Manuel Perez, P.E.**

MIAMI-DADE COUNTY APPROVED

10/24/23

NOA No. 23-1010.03
Expiration Date: December 27, 2026
Approval Date: November 02, 2023

Lawson Industries, Inc.

NOTICE OF ACCEPTANCE: EVIDENCE SUBMITTED

1. EVIDENCE SUBMITTED UNDER PREVIOUS NOA's

A. DRAWINGS

1. Manufacturer's die drawings and sections.
(Submitted under NOA No. 09-0706.09)

2. Drawing No. **L7700-0901**, titled "Series-7700 Single Hung Flange Frame Impact Window", sheets 1 through 5 of 5, dated 05/27/09, with revision **F** dated 07/01/22, prepared by manufacturer, signed and sealed by Thomas J. Sotos, P.E.
(Submitted under NOA No. 22-0719.01)

B. TESTS

1. Test reports on: 1) Uniform Static Air Pressure Test, Loading per FBC TAS 202-94
2) Large Missile Impact Test per FBC, TAS 201-94
3) Cyclic Wind Pressure Loading per FBC, TAS 203-94
along with marked-up drawings and installation diagram of 3 specimens of a series 7700 impact single hung window, O/X configuration, prepared by QAI Laboratories, Test Report No. **QAI-13092,** dated 06/10/22, signed and sealed by Idalmis Ortega, P.E.
(Submitted under NOA No. 22-0719.01)

2. Test reports on: 1) Uniform Static Air Pressure Test, Loading per FBC TAS 202-94
2) Large Missile Impact Test per FBC, TAS 201-94
3) Cyclic Wind Pressure Loading per FBC, TAS 203-94
along with marked-up drawings and installation diagram of an aluminum single hung window, prepared by Hurricane Engineering & Testing, Inc., Test Reports No. **HETI-09-2530A** and **HETI-09-2530B**, dated 03/02/09, signed and sealed by Candido F. Font, P.E.
(Submitted under NOA No. 09-0706.09)

3. Test reports on: 1) Uniform Static Air Pressure Test, Loading per FBC TAS 202-94
2) Large Missile Impact Test per FBC, TAS 201-94
3) Cyclic Wind Pressure Loading per FBC, TAS 203-94
along with marked-up drawings and installation diagram of an aluminum single hung window, prepared by Hurricane Engineering & Testing, Inc., Test Reports No. **HETI-08-2003C, HETI-08-2004A**, **HETI-08-2060A & B, HETI-08-2061A & B, HETI-08-2062A & B**, **HETI-08-2063A & B**, **HETI-08-2064A & B**, dated 03/15/08, signed and sealed by Candido F. Font, P.E.
(Submitted under NOA No. 08-0825.17)

Manuel Perez, P.E.
Product Control Examiner
NOA No. 23-1010.03
Expiration Date: December 27, 2026
Approval Date: November 02, 2023

NOTICE OF ACCEPTANCE: EVIDENCE SUBMITTED

1. EVIDENCE SUBMITTED UNDER PREVIOUS NOA's (CONTINUED)

B. TESTS (CONTINUED)

4. Test reports on: 1) Air Infiltration Test, per FBC, TAS 202-94
2) Uniform Static Air Pressure Test, Loading per FBC TAS 202-94
3) Water Resistance Test, per FBC TAS 202-94
4) Large Missile Impact Test per FBC, TAS 201-94
5) Cyclic Wind Pressure Loading per FBC, TAS 203-94
6) Forced Entry Test, per FBC 2411 3.2.1, TAS 202-94

along with marked-up drawings and installation diagram of an aluminum single hung window, prepared by Fenestration Testing Laboratory, Inc., Test Reports No. **FTL-2987** and **FTL-2986**, dated 04/03/01 and 03/27/01 respectively, both signed and sealed by Luis Antonio Figueredo, P.E.
(Submitted under NOA No. 01-1009.01)

C. CALCULATIONS

1. Anchor verification calculations and structural analysis, complying with FBC 7th Edition (2020), dated 05/28/09, revised on 01/18/10 and updated on 07/12/22, prepared by manufacturer, signed and sealed by Thomas J. Sotos, P.E.
(Submitted under NOA No. 22-0719.01)

2. Glazing complies with **ASTM E1300-09**

D. QUALITY ASSURANCE

1. Miami-Dade Department of Regulatory and Economic Resources (RER).

E. MATERIAL CERTIFICATIONS

1. Notice of Acceptance No. **20-0915.19** issued to **Kuraray America, Inc.** for their **"SentryGlas® (Clear and White) Glass Interlayers**" dated 11/19/20, expiring on 07/04/23.

2. Notice of Acceptance No. **20-0915.22** issued to **Kuraray America, Inc.** for their "**Trosifol® Ultraclear, Clear and Color PVB Glass Interlayers**" dated 11/19/20, expiring on 07/08/24.

3. Notice of Acceptance No. **21-0216.01** issued to **Eastman Chemical Company (MA)** for their "**Saflex PVB Interlayers - Clear and Colored for Glass**" dated 04/29/21, expiring on 05/21/26.

4. Notice of Acceptance No. **20-0622.03** issued to **Eastman Chemical Company (MA)** for their "**Saflex Storm - Saflex and Saflex HP Composite Glass Interlayers with PET Core"** dated 08/06/20, expiring on 12/11/23.

Manuel Pérez, P.E.
Product Control Examiner
NOA No. 23-1010.03
Expiration Date: December 27, 2026
Approval Date: November 02, 2023

NOTICE OF ACCEPTANCE: EVIDENCE SUBMITTED

1. EVIDENCE SUBMITTED UNDER PREVIOUS NOA's

F. STATEMENTS

1. Statement letter of conformance, complying with **FBC 7th Edition (2020)**, dated July 12, 2022, issued by the manufacturer, signed and sealed by Thomas J. Sotos, P.E.
(Submitted under NOA No. 22-0719.01)

2. Statement letter of no financial interest, dated July 12, 2022, issued by the manufacturer, signed and sealed by Thomas J. Sotos, P.E.
(Submitted under NOA No. 22-0719.01)

3. Proposal No. **22-0505** issued by the Product Control Section, dated May 12, 2022, signed by Manuel Perez, P.E.
(Submitted under NOA No. 22-0719.01)

4. Laboratory compliance letter for Test Report No. **HETI-09-2530A & B**, issued by Hurricane Engineering & Testing, Inc., dated 03/02/09, signed and sealed by Candido F. Font, P.E.
(Submitted under NOA No. 09-0706.09)

5. Laboratory compliance letter for Test Reports No. **HETI-08-2003C, HETI-08-2004A**, **HETI-08-2060A & B, HETI-08-2061A & B, HETI-08-2062A & B**, **HETI-08-2063A & B**, **HETI-08-2064A &B**, issued by Hurricane Engineering & Testing, Inc., dated 03/15/08, signed and sealed by Candido F. Font, P.E.
(Submitted under NOA No. 08-0825.17)

6. Laboratory compliance letter for Test Reports No. **FTL-2987** and **FTL-2986**, issued by Fenestration Testing Laboratory, Inc., dated 04/03/01 and 03/27/01, signed and sealed by Luis Antonio Figueredo, P.E.
(Submitted under NOA No. 01-0406.08)

G. OTHERS

1. Notice of Acceptance No. **20-0813.07**, issued to Lawson Industries, Inc. for their Series "SH-7700 (Flange Frame)" Aluminum Single Hung Window – L.M.I., approved on 12/17/20 and expiring on 12/27/26.

Manuel Perez, P.E.
Product Control Examiner
NOA No. 23-1010.03
Expiration Date: December 27, 2026
Approval Date: November 02, 2023

NOTICE OF ACCEPTANCE: EVIDENCE SUBMITTED

2. NEW EVIDENCE SUBMITTED (CONTINUED)

A. DRAWINGS

1. Drawing No. **L7700-0901**, titled "Series-7700 Single Hung Flange Frame Impact Window", sheets 1 through 5 of 5, dated 05/27/09, with revision **G** dated 09/22/23, prepared by manufacturer, signed and sealed by Thomas J. Sotos, P.E.

B. TESTS

1. Test reports on: 1) Uniform Static Air Pressure Test, Loading per FBC, TAS 202-94
2) Large Missile Impact Test per FBC, TAS 201-94
3) Cyclic Wind Pressure Loading per FBC, TAS 203-94
along with marked-up drawings and installation diagram of a series SH-7700 aluminum single hung window, prepared by Hurricane Engineering & Testing, Inc., Test Report No. **HETI-23-8049**, dated 07/24/23, signed and sealed by Ram N. Tewari, P.E.

C. CALCULATIONS

1. None.

D. QUALITY ASSURANCE

1. Miami-Dade Department of Regulatory and Economic Resources (RER)

E. MATERIAL CERTIFICATIONS

1. Notice of Acceptance No. **22-1116.01** issued to **Kuraray America, Inc.** for their **"SentryGlas® (Clear and White) Glass Interlayers**" dated 12/15/22, expiring on 07/04/28.

2. Notice of Acceptance No. **20-0915.22** issued to **Kuraray America, Inc.** for their "**Trosifol® Ultraclear, Clear and Color PVB Glass Interlayers**" dated 11/19/20, expiring on 07/08/24.

3. Notice of Acceptance No. **21-0216.01** issued to **Eastman Chemical Company (MA)** for their "**Saflex PVB Interlayers - Clear and Colored for Glass**" dated 04/29/21, expiring on 05/21/26.

4. Notice of Acceptance No. **22-1130.05** issued to **Eastman Chemical Company (MA)** for their "**Saflex Storm - Saflex and Saflex HP Composite Glass Interlayers with PET Core"** dated 01/26/23, expiring on 12/11/28.

Manuel Perez, P.E.
Product Control Examiner
NOA No. 23-1010.03
Expiration Date: December 27, 2026
Approval Date: November 02, 2023

NOTICE OF ACCEPTANCE: EVIDENCE SUBMITTED

2. NEW EVIDENCE SUBMITTED (CONTINUED)

F. STATEMENTS

1. Statement letter of conformance, complying with **FBC 8th Edition (2023)**, dated October 4, 2023, issued by the manufacturer, signed and sealed by Thomas J. Sotos, P.E.
2. Statement letter of no financial interest, dated October 4, 2023, issued by the manufacturer, signed and sealed by Thomas J. Sotos, P.E.
3. Proposal No. **23-0461R** issued by the Product Control Section, dated June 13, 2023 and revised on June 16, 2023, signed by Manuel Perez, P.E.

G. OTHERS

1. Notice of Acceptance No. **22-0719.01**, issued to Lawson Industries, Inc. for their Series "SH-7700 (Flange Frame)" Aluminum Single Hung Window – L.M.I., approved on 08/11/22 and expiring on 12/27/26.

Manuel Perez, P.E.
Product Control Examiner
NOA No. 23-1010.03
Expiration Date: December 27, 2026
Approval Date: November 02, 2023

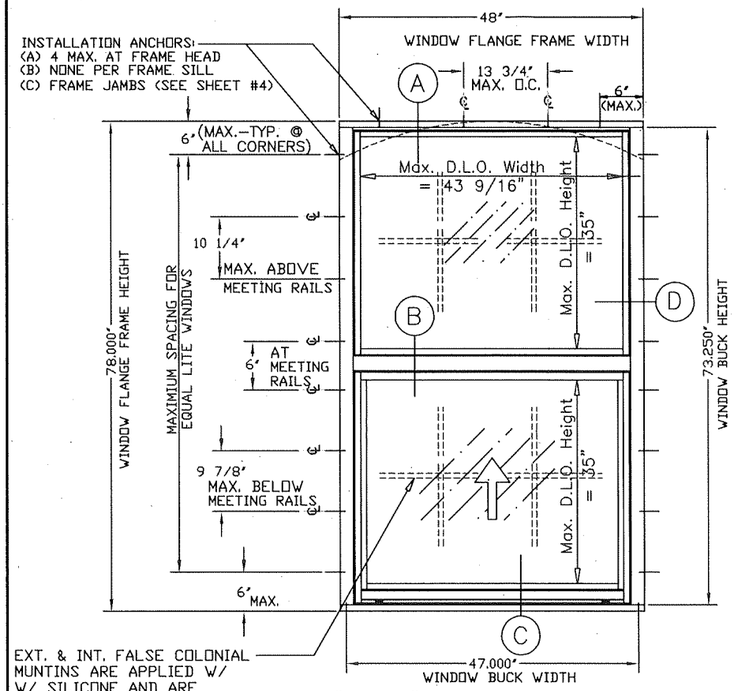

48" x 78" EQUAL LITE ELEVATION
* INCLUDES UN-EQUAL LITE AND RADIUS HEAD
(LIMITED TO LOADS ON SHEET 4 OF 5)

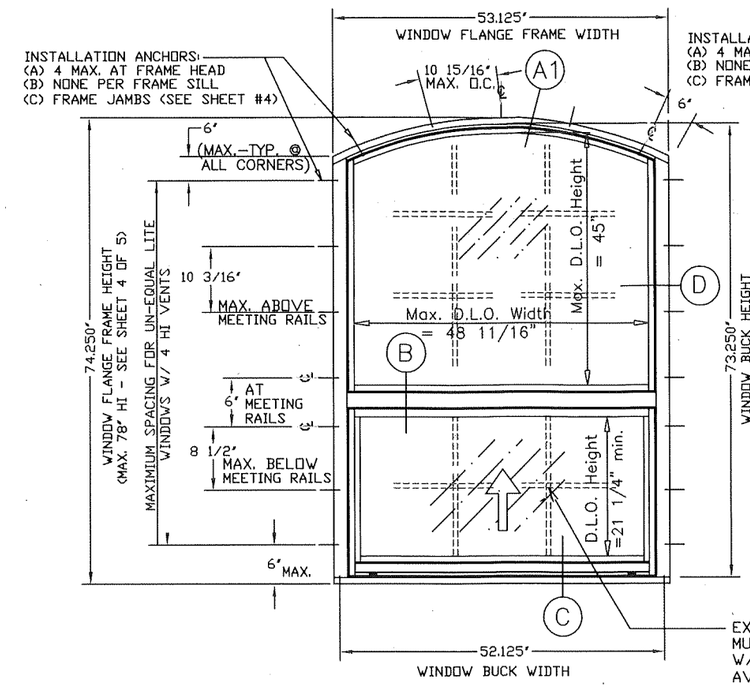

UN-EQUAL LITE RADIUS ELEVATION
(LIMITED TO LOADS ON SHEET 4 OF 5)

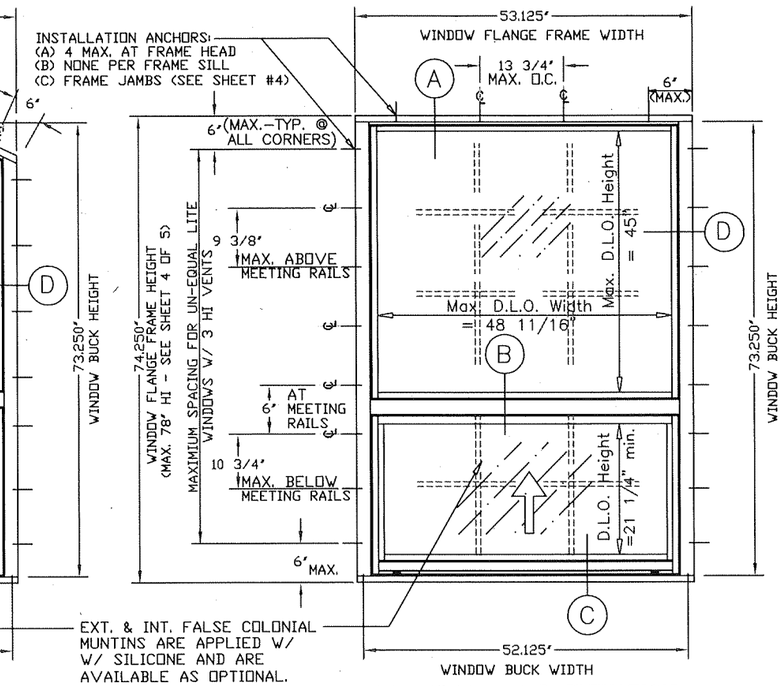

UN-EQUAL LITE ELEVATION
(LIMITED TO LOADS ON SHEET 4 OF 5)

SERIES-7700 SINGLE HUNG IMPACT WINDOW - FLANGE FRAME

General Notes:

1.) THIS WINDOW SYSTEM IS DESIGNED AND TESTED TO COMPLY WITH THE REQUIREMENTS OF THE FLORIDA BUILDING CODE (2020-7th Edition & 2023-8th Edition) INCLUDING HIGH VELOCITY HURRICANE ZONE VELOCITY (HVHZ) AND ASTM 1300-09. THIS PRODUCT IS IMPACT RESISTANT. (SHUTTERS NOT REQUIRED)
2.) WOOD BUCKS SHALL BE INSTALLED AND ANCHORED SO THAT THE BUILDING RESISTS THE SUPERIMPOSED LOADS IN ACCORDANCE WITH THE REQUIREMENTS OF THE F.B.C. & TO BE REVIEWED BY BUILDING OFFICIAL.
3.) ANCHORS SHOWN ABOVE ARE AS PER TEST UNITS. ANCHORS ON ALL WINDOW SIZES ARE NOT TO EXCEED THESE MAXIMUM SPACINGS ON CENTER (O.C.) AND AS TABULATED ON SHEET 4.
4.) ANCHOR CONDITIONS NOT DESCRIBED IN THESE DRAWING'S ARE TO BE ENGINEERED ON A SITE SPECIFIC BASIS, UNDER SEPARATE APPROVAL AND TO BE REVIEWED BY BUILDING OFFICIAL.
5.) WINDOWS ARE QUALIFIED FOR USE WITH SINGLE GLAZE LAMINATED GLASS TYPES TABULATED HEREIN (SEE SHEET #3), AND FOR USE WITH DOUBLE GLAZE LAMINATED INSULATED GLASS TYPES TABULATED HEREIN (SEE SHEET #3).
6.) SEE SHEET 3 FOR LOCK DETAILS & OPTIONS.
7.) SEE SHEET 4 FOR DESIGN PRESSURES AND GLASS TYPES.
8.) FOR OPTIONAL FRAME INSTALLATION DETAILS SEE SHEET 3.
9.) EXT. & INT. FALSE COLONIAL MUNTINS ARE OPTIONAL & AND ARE APPLIED W/ SILICONE
10.) WOOD BUCKS IN CONTACT WITH CONCRETE MUST BE PRESSURE TREATED AND ANCHORED (BY OTHERS), PRIOR TO WINDOW INSTALLATION. (SEE SHEET #2 FOR DETAIL & NOTES) WOOD BUCKS TO BE ANCHORED IN COMPLIANCE WITH THE FBC CHAPTER 24, SECTION 11.3.3.3.
11.) APPROVAL APPLIES TO SINGLE UNITS OR SIDE BY SIDE MULLED UNITS.
12.) MULLING SINGLE HUNG WINDOWS WITH OTHER TYPES OF MIAMI-DADE COUNTY APPROVED WINDOWS USING A MIAMI-DADE COUNTY APPROVED MULLION IN BETWEEN ARE ACCEPTABLE BUT THE LOWER DESIGN PRESSURE FROM THE WINDOWS OR MULLION APPROVAL WILL APPLY TO THE ENTIRE MULLED SYSTEM.
13.) SEE SHEET # 3 FOR MULLION/METAL ATTACHMENT DETAILS & OPTIONS.
14.) ALL METAL/STEEL IN CONTACT WITH ALUMINUM OR OTHER DISSIMILAR MATERIALS TO BE PAINTED OR PLATED AND SHALL MEET THE FLORIDA BLDG. CODE.

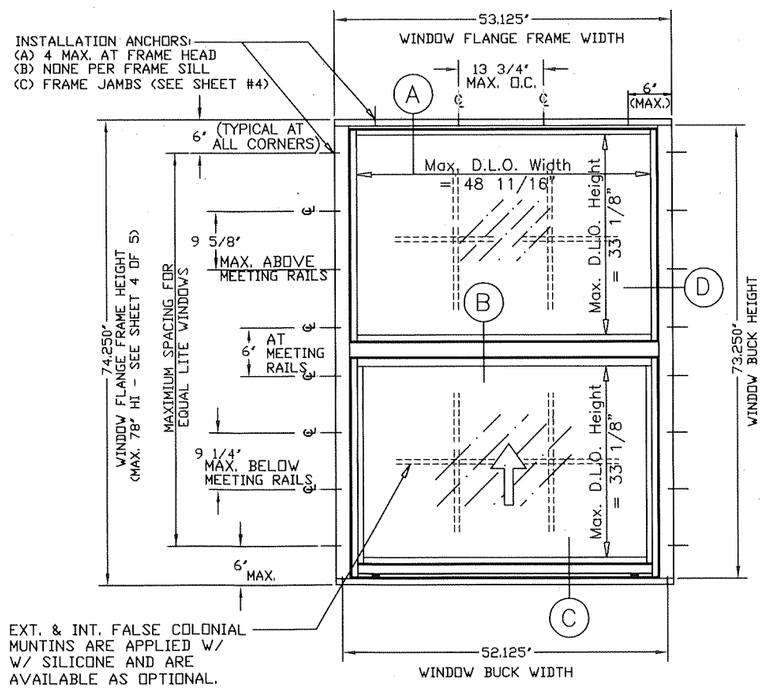

EQUAL LITE ELEVATION
(LIMITED TO LOADS ON SHEET 4 OF 5)

PRODUCT REVISED
As complying with the Florida Building Code
NOA-No. 23-1010.03
Expiration Date: 12/27/2026
By: Manuel Perez
Miami-Dade Product Control

THOMAS J. SOTOS
PROFESSIONAL ENGINEER
FL LIC. # 55225

THOMAS J. SOTOS LICENSE No 55225 STATE OF FLORIDA PROFESSIONAL ENGINEER

DATE OCT 04 2023

LAMSON INDUSTRIES, INC.
8501 N.W. 90 ST.
MEDLEY, FLORIDA 33166
PH No. (305) 696-8660

MANUFACTURER OF QUALITY ALUMINUM WINDOWS AND GLASS DOORS

SERIES-7700 SINGLE HUNG FLANGE FRAME IMPACT WINDOW

APPROVED ELEVATIONS, CONFIGURATIONS AND NOTES

Revision Notes:	B. Revised to Comply w/ 2014 FBC C. Compliance w/ FBC 5th Edition (2014) and ASTM E1300-09 D. Revised to Comply w/ 2017 FBC E. Revised to Comply w/ 2020 FBC F. Added Glass Type #8 @ SHEET 4 OF 5 G. Revised to Comply w/ 2023 FBC
Drawn By:	N. ERAZO
Date Drawn:	05-27-09
Revised By:	N. Erazo
Date Revised:	09/22/23
Revision Level:	G
Scale:	
Product Reference Number:	
Drawing Number:	L7700-0901
Sheet:	1 OF 5
Revision #:	

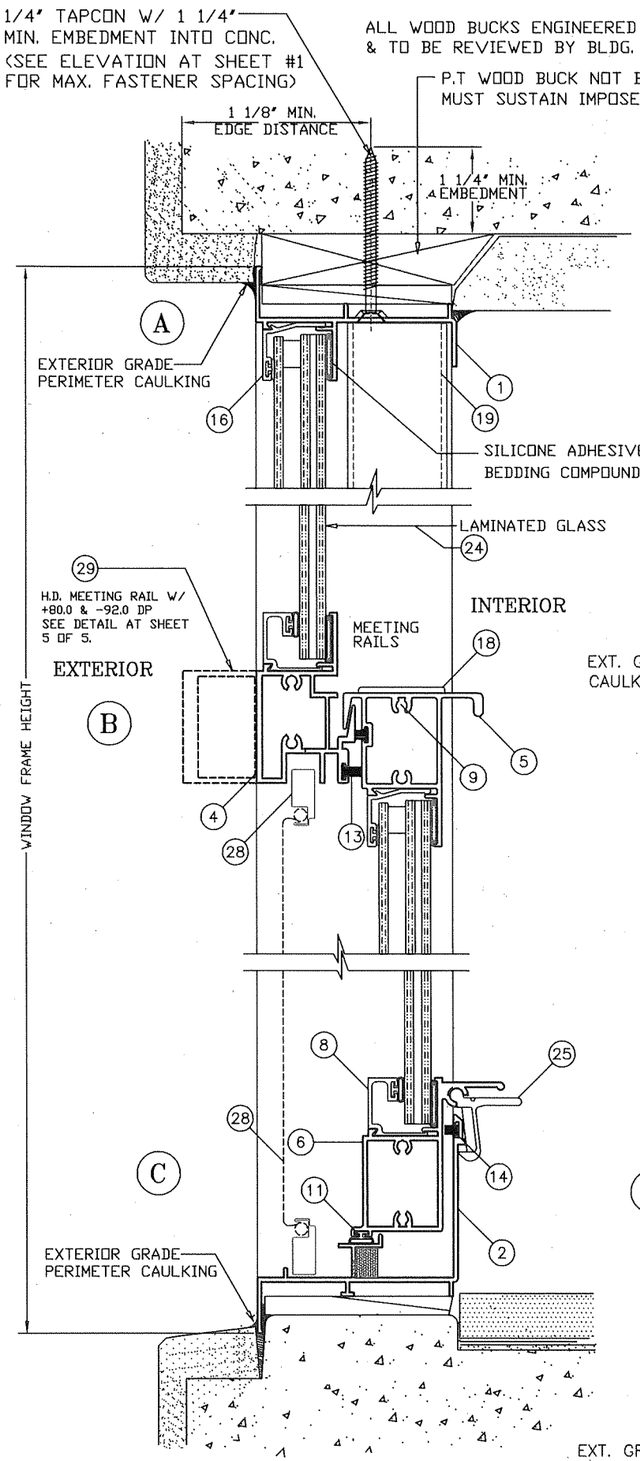

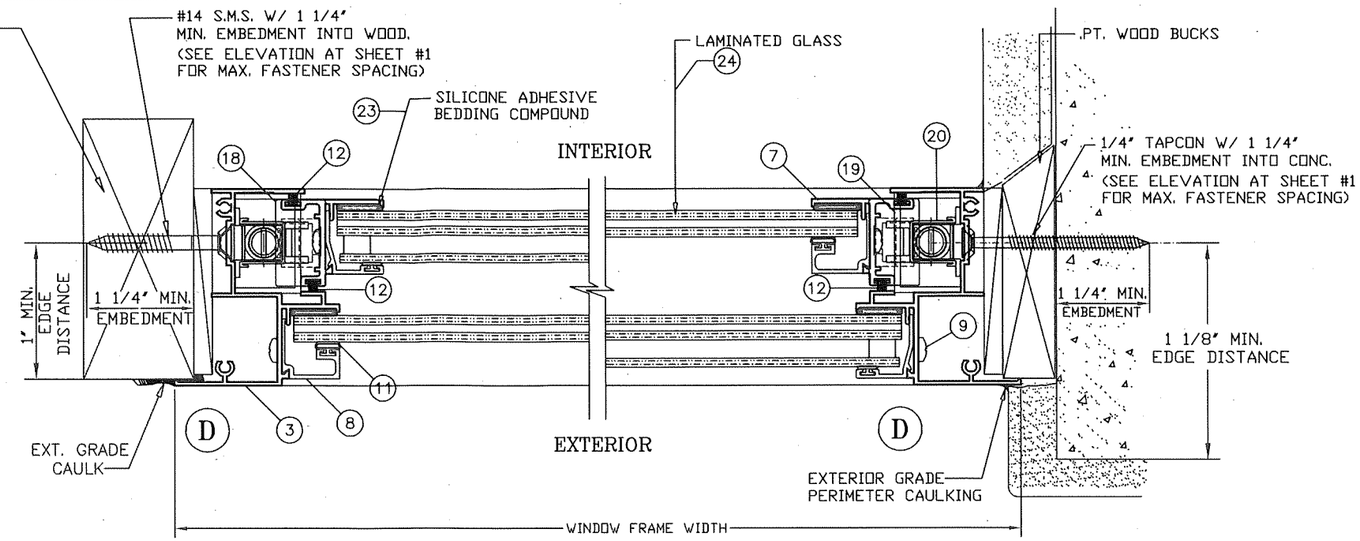

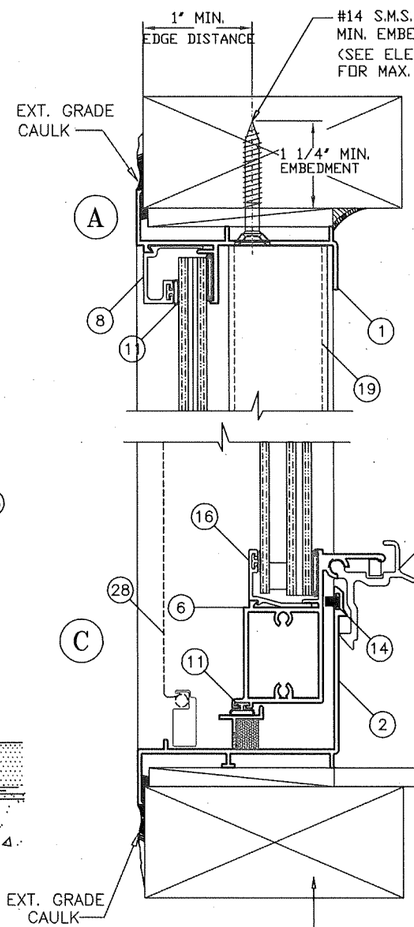

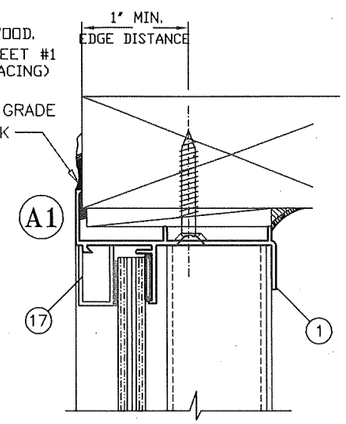

WINDOW INSTALLATION NOTES:

1. THE WINDOW FRAME FLANGE TO BE BACK-BEDDED W/ AN EXT. GRADE CAULK THROUGHOUT THE ENTIRE PERIMETER OF FLANGE BY WINDOW INSTALLER (TYP.)
2. THE EXPOSED EXT. PERIMETER OF THE WINDOW FRAME TO BE SEALED W/ AN APPROVED EXTERIOR GRADE CAULK BY OTHERS (TYP.)

* WHEN THE GAP BETWEEN THE WINDOW FRAME AND THE BUCK OR MASONRY IS LESS THAN 1/8", SHIMS ARE NOT REQUIRED.

ANCHORS NOTE:

ANCHORS TO BE #12 SMS OR WD. SCREWS INTO WOOD, OR 1/4" TAPCONS or APPROVED CONC. FASTENERS INTO CONC., WITH A MINIMUM OF 1 1/4" PENETRATION INTO WOOD OR CONC. (REFER TO LOAD TABLES AT SHEET 4 OF 5 FOR QUANTITIES REQUIRED)

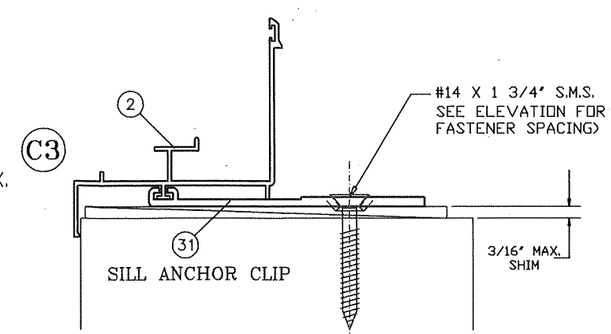

NOTE: 6" LONG CLIP (* 1X ANCHOR) ON EQUAL LITE WINDOWS WITH GLASS TYPE #8 - SEE SHEET 4 OF 5.

(*) ALL ANCHORS AT SILL SHALL MATCH THE ANCHORS SPACING AT FRAME HEAD

PRODUCT REVISED
As complying with the Florida Building Code
NOA-No. 23-1010.03
Expiration Date: 12/27/2026
By: Manuel Perez
Miami-Dade Product Control

THOMAS J. SOTOS
PROFESSIONAL ENGINEER
FL LIC. # 55225

STATE OF FLORIDA · THOMAS J. SOTOS · No 55225 · PROFESSIONAL ENGINEER

DATE OCT 04 2023

LAWSON INDUSTRIES, INC.
8501 N.W. 90 ST.
MEDLEY, FLORIDA 33166
PH No. (305) 696-8660

MANUFACTURER OF QUALITY ALUMINUM WINDOWS AND GLASS DOORS

SERIES-7700 SINGLE HUNG FLANGE FRAME IMPACT WINDOW

WINDOW VERTICAL AND HORIZONTAL CROSS SECTION, DETAILS & NOTES

Revision #:	Sheet: 2 OF 5	Drawing Number: L7700-0901	Product Reference Number:

Revision Notes:
B. Revised to Comply w/ 2014 FBC
C. Compliance w/ FBC 5th Edition (2014) and ASTM E1300-09
D. Revised to Comply w/ 2017 FBC
E. Revised to Comply w/ 2020 FBC
F. Added Glass Type #8 @ SHEET 4 OF 5
G. Revised to Comply w/ 2023 FBC

Drawn By: N. ERAZO	Date Drawn: 05-27-09	
Revised By: N. Erazo	Date Revised: 09/22/23	
Revision Level: G	Scale:	

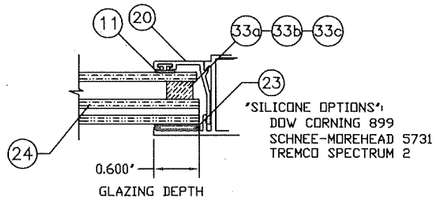

INSULATED LAMINATED GLASS COMPOSITION TYPE 6			
ITEM	GLASS DESCRIPTION	DETAIL	LAMINATE DESCRIPTION
1	1/8" HEAT-STRENGHTENED GLASS	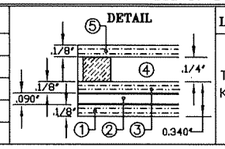	TROSIFOL PVB by Kuraray America, Inc.
2	0.090" PLASTIC INTERLAYER		
3	1/8" HEAT-STRENGHTENED GLASS		
4	1/4" INSULATED AIR SPACE		
5	1/8" ANNEALED GLASS		

INSULATED LAMINATED GLASS COMPOSITION TYPE 7			
ITEM	GLASS DESCRIPTION	DETAIL	LAMINATE DESCRIPTION
1	1/8" ANNEALED GLASS	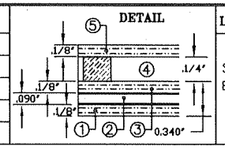	SAFLEX PVB by Eastman Chemical co.
2	0.090" PLASTIC INTERLAYER		
3	1/8" ANNEALED GLASS		
4	1/4" INSULATED AIR SPACE		
5	1/8" ANNEALED GLASS		

GLAZING DETAILS AND OPTIONS

NOTE:
WINDOWS WITH GLASS TYPES "6 & 7" INSTALLED ABOVE 30ft IN THE HVHZ, THE I.G. IN THE EXTERIOR LITE SHALL BE TEMPERED TO COMPLY WITH THE SMALL MISSILE IMPACT RESISTANCE REQUIREMENTS (FBC-2020 & 2023, Chapter 24 Section 2411.3.3.7).

(33) **Insulated Spacer Types & Options**
33 a) "TrueSeal" Swiggle Seal
33 b) "Quanex" SuperSpacer w/ Isomelt M
33 c) "Quanex" Duraseal

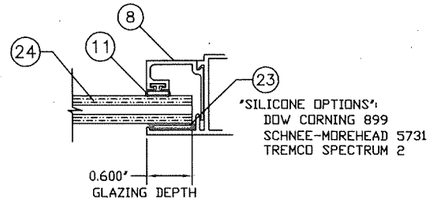

LAMINATED GLASS COMPOSITION - TYPE 2			
ITEM	GLASS DESCRIPTION	DETAIL	LAMINATE DESCRIPTION
1	1/8" ANNEALED GLASS	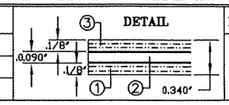	SAFLEX PVB by Eastman Chemical co.
2	0.090" PLASTIC INTERLAYER		
3	1/8" ANNEALED GLASS		

LAMINATED GLASS COMPOSITION - TYPE 3			
ITEM	GLASS DESCRIPTION	DETAIL	LAMINATE DESCRIPTION
1	1/8" ANNEALED GLASS	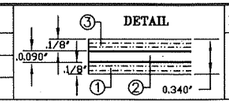	SENTRYGLAS by Kuraray America, Inc.
2	0.090" PLASTIC INTERLAYER		
3	1/8" ANNEALED GLASS		

LAMINATED GLASS COMPOSITION - TYPE 4			
ITEM	GLASS DESCRIPTION	DETAIL	LAMINATE DESCRIPTION
1	1/8" ANNEALED GLASS	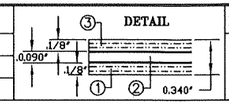	TROSIFOL PVB by Kuraray America, Inc.
2	0.090" PLASTIC INTERLAYER		
3	1/8" ANNEALED GLASS		

LAMINATED GLASS COMPOSITION - TYPE 5			
ITEM	GLASS DESCRIPTION	DETAIL	LAMINATE DESCRIPTION
1	1/8" HEAT-STRENGHTENED GLASS	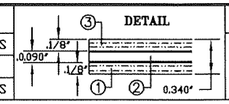	TROSIFOL PVB by Kuraray America, Inc.
2	0.090" PLASTIC INTERLAYER		
3	1/8" HEAT-STRENGHTENED GLASS		

LAMINATED GLASS COMPOSITION - TYPE 8			
ITEM	GLASS DESCRIPTION	DETAIL	LAMINATE DESCRIPTION
1	3/16" HEAT-STRENGHTENED GLASS	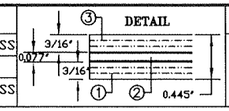	SAFLEX "STORM" by Eastman Chemical co.
2	0.077" PLASTIC INTERLAYER		
3	3/16" HEAT-STRENGHTENED GLASS		

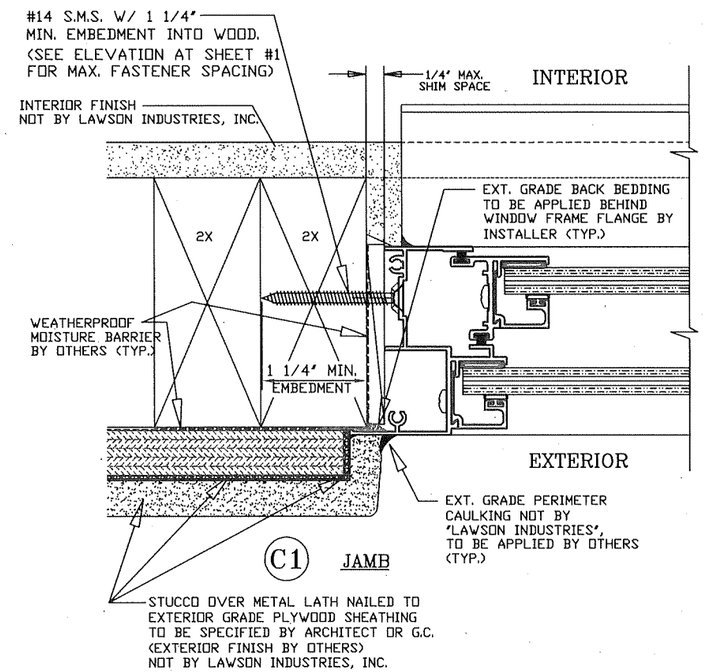

WOOD FRAME INSTALLATION DETAIL

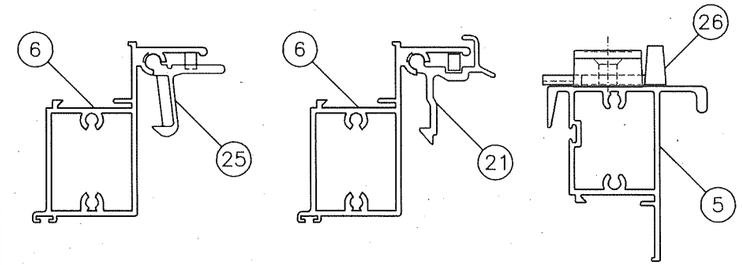

LOCK (LATCH AND SWEEP) OPTIONS

1. BOTH EXTRUDED ALUMINUM AND PLASTIC LIFT HANDLE LOCKS ARE QUALIFIED FOR USE ON ALL WINDOWS.
2. BOTH DIE CAST AND NYLON CAM LOCKS ARE QUALIFIED FOR USE ON ALL WINDOWS.
3. TWO (2) LOCKS ARE REQUIRED PER EACH VENT.

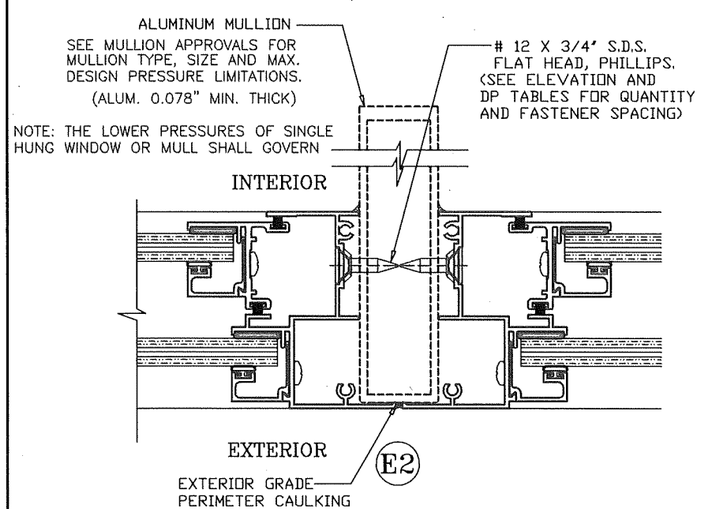

FRAME MULLING DETAIL

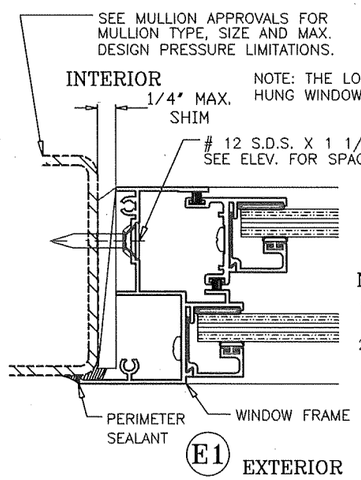

NOTE:
1. ALL STEEL IN CONTACT WITH ALUM. TO BE PAINTED OR PLATED.
2. METAL STRUCTURES:
   A) STEEL : Fy = 36 KSI MIN. (STEEL 18 GA. MIN. THICK - 0.048")
   B) ALUMINUM : 6063-T5 MIN. (ALUM. 0.078" MIN. THICK)

METAL STRUCTURE ATTACHMENT DETAIL

PRODUCT REVISED
As complying with the Florida Building Code
NOA-No. 23-1010.03
Expiration Date: 12/27/2026
By: Manuel Perez
Miami-Dade Product Control

THOMAS J. SOTOS
PROFESSIONAL ENGINEER
FL LIC. # 55225

THOMAS J. SOTOS LICENSE No 55225 STATE OF FLORIDA PROFESSIONAL ENGINEER
DATE OCT 04 2023

LAWSON INDUSTRIES, INC.
8501 N.W. 90 ST.
MEDLEY, FLORIDA 33166
PH No. (305) 696-8660

MANUFACTURER OF QUALITY ALUMINUM WINDOWS AND GLASS DOORS

SERIES-7700 SINGLE HUNG FLANGE FRAME IMPACT WINDOW

DESIGN PRESSURES, GLAZING DETAILS & LOCK OPTIONS

Revision Notes:	B. Revised to Comply w/ 2014 FBC C. Compliance w/ FBC 5th Edition (2014) and ASTM E1300-09 D. Revised to Comply w/ 2017 FBC E. Revised to Comply w/ 2020 FBC F. Added Glass Type #8 @ SHEET 4 OF 5 G. Revised to Comply w/ 2023 FBC
Drawn By:	N. ERAZO
Date Drawn:	05-27-09
Revised By:	N. Erazo
Date Revised:	09/22/23
Revision Level:	G
Scale:	
Product Reference Number:	L7700-0901
Drawing Number:	
Sheet:	3 OF 5
Revision #:	

DESIGN LOAD CAPACITY (PSF) - VIEW WINDOWS W/ 3H VENTS

WINDOW WIDTH	WINDOW HEIGHT	# Jamb Anchors	+ / - Pressures (psf) Glass Type 4	Glass Type 5	Glass Type 6
19.125	50.625	6	60.0	80.0	80.0
26.5	50.625		60.0	80.0	80.0
37	50.625		60.0	80.0	80.0
42	50.625		60.0	80.0	80.0
48	50.625		60.0	80.0	80.0
53.125	50.625		60.0	80.0	80.0
19.125	59	6	60.0	80.0	80.0
26.5	59		60.0	80.0	80.0
37	59		60.0	80.0	80.0
42	59		60.0	80.0	80.0
48	59		60.0	80.0	80.0
53.125	59		60.0	80.0	80.0
19.125	63	6	60.0	80.0	80.0
26.5	63		60.0	80.0	80.0
37	63		60.0	80.0	80.0
42	63		60.0	80.0	80.0
48	63		60.0	80.0	80.0
53.125	63		60.0	80.0	80.0
19.125	74.25	8	60.0	80.0	80.0
26.5	74.25		60.0	80.0	80.0
37	74.25		60.0	80.0	80.0
42	74.25		60.0	80.0	80.0
19.125	78	8	60.0	80.0	80.0
26.5	78		60.0	80.0	80.0
37	78		60.0	80.0	80.0
42	78		59.0	79.0	79.0

DESIGN LOAD CAPACITY (PSF) - VIEW WINDOWS W/ 4H VENTS

WINDOW WIDTH	WINDOW HEIGHT	# Jamb Anchors	+ / - Pressures (psf) Glass Type 4	Glass Type 5	Glass Type 6
19.125	59	6	60.0	80.0	80.0
26.5	59		60.0	80.0	80.0
37	59		60.0	80.0	80.0
42	59		60.0	80.0	80.0
48	59		60.0	80.0	80.0
53.125	59		60.0	80.0	80.0
19.125	63	6	60.0	80.0	80.0
26.5	63		60.0	80.0	80.0
37	63		60.0	80.0	80.0
42	63		60.0	80.0	80.0
48	63		60.0	80.0	80.0
53.125	63		60.0	80.0	80.0
19.125	74.25	8	60.0	80.0	80.0
26.5	74.25		60.0	80.0	80.0
37	74.25		60.0	80.0	80.0
42	74.25		60.0	80.0	80.0
53.125	74.25		60.0	80.0	80.0
19.125	78	8	60.0	80.0	80.0
26.5	78		60.0	80.0	80.0
37	78		60.0	80.0	80.0
42	78		59.0	79.0	79.0

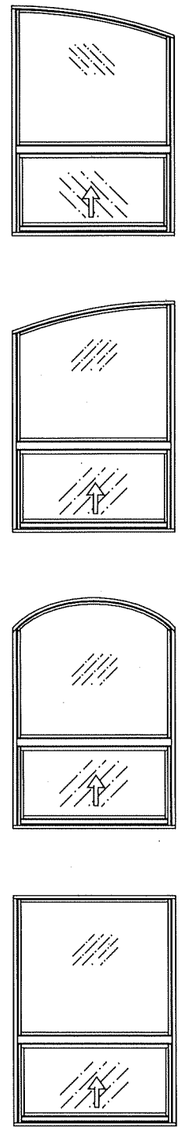

APPROVED CONFIGURATIONS UN-EQUAL LITE

DESIGN LOAD CAPACITY (PSF) - EQUAL LITE WINDOWS

WINDOW WIDTH	WINDOW HEIGHT	# Jamb Anchors	+ / - Pressures (psf) Glass Type 2	Glass Type 3	Glass Type 4	Glass Type 5	Glass Type 6	Glass Type 7	Glass Type 8 (W/ H.D. Meeting Rail) (+) Pos.	(-) Neg.
19.125	26	4	80.0	80.0	60.0	80.0	80.0	80.0	80.0	92.0
26.5	26		80.0	80.0	60.0	80.0	80.0	80.0	80.0	92.0
37	26		80.0	80.0	60.0	80.0	80.0	80.0	80.0	92.0
42	26		80.0	80.0	60.0	80.0	80.0	80.0	80.0	92.0
48	26		80.0	80.0	60.0	80.0	80.0	80.0	80.0	92.0
53.125	26		80.0	80.0	60.0	80.0	80.0	80.0	80.0	92.0
19.125	38.375	4	80.0	80.0	60.0	80.0	80.0	80.0	80.0	92.0
26.5	38.375		80.0	80.0	60.0	80.0	80.0	80.0	80.0	92.0
37	38.375		80.0	80.0	60.0	80.0	80.0	80.0	80.0	92.0
42	38.375		80.0	80.0	60.0	80.0	80.0	80.0	80.0	92.0
48	38.375		80.0	80.0	60.0	80.0	80.0	80.0	80.0	92.0
53.125	38.375		80.0	80.0	60.0	80.0	80.0	80.0	80.0	92.0
19.125	50.625	6	80.0	80.0	60.0	80.0	80.0	80.0	80.0	92.0
26.5	50.625		80.0	80.0	60.0	80.0	80.0	80.0	80.0	92.0
37	50.625		80.0	80.0	60.0	80.0	80.0	80.0	80.0	92.0
42	50.625		80.0	80.0	60.0	80.0	80.0	80.0	80.0	92.0
48	50.625		80.0	80.0	60.0	80.0	80.0	80.0	80.0	92.0
53.125	50.625		80.0	80.0	60.0	80.0	80.0	80.0	80.0	92.0
19.125	59	6	80.0	80.0	60.0	80.0	80.0	80.0	80.0	92.0
26.5	59		80.0	80.0	60.0	80.0	80.0	80.0	80.0	92.0
37	59		80.0	80.0	60.0	80.0	80.0	80.0	80.0	92.0
42	59		80.0	80.0	60.0	80.0	80.0	80.0	80.0	92.0
48	59		80.0	80.0	-	-	-	80.0	80.0	92.0
53.125	59		80.0	80.0	-	-	-	80.0	80.0	92.0
19.125	63	6	80.0	80.0	60.0	80.0	80.0	80.0	80.0	92.0
26.5	63		80.0	80.0	60.0	80.0	80.0	80.0	80.0	92.0
37	63		80.0	80.0	60.0	80.0	80.0	80.0	80.0	92.0
42	63		80.0	80.0	60.0	80.0	80.0	80.0	80.0	92.0
48	63		80.0	80.0	-	-	-	80.0	80.0	92.0
53.125	63		80.0	80.0	-	-	-	80.0	80.0	92.0
19.125	74.25	8	80.0	80.0	60.0	80.0	80.0	80.0	80.0	92.0
26.5	74.25		80.0	80.0	60.0	80.0	80.0	80.0	80.0	92.0
37	74.25		80.0	80.0	-	-	-	80.0	80.0	92.0
42	74.25		80.0	80.0	-	-	-	80.0	80.0	92.0
48	74.25		80.0	80.0	-	-	-	80.0	80.0	92.0
53.125	74.25		74.0	77.0	-	-	-	80.0	80.0	92.0
19.125	78	8	80.0	80.0	60.0	80.0	80.0	80.0	-	-
26.5	78		80.0	80.0	60.0	80.0	80.0	80.0	-	-
37	78		80.0	80.0	-	-	-	80.0	-	-
42	78		79.0	79.0	-	-	-	79.0	-	-
48	78		71.0	71.0	-	-	-	71.0	-	-

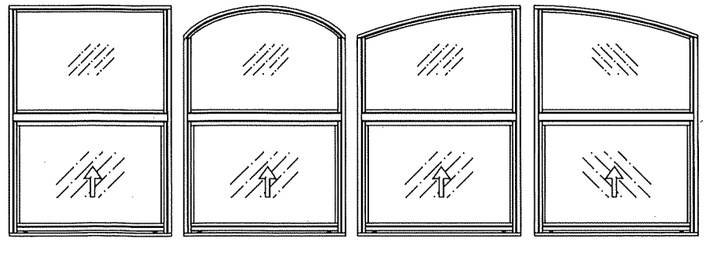

APPROVED CONFIGURATIONS – EQUAL LITE

PRODUCT REVISED
As complying with the Florida Building Code
NOA-No. 23-1010.03
Expiration Date: 12/27/2026
By: Manuel Perez
Miami-Dade Product Control

THOMAS J. SOTOS
PROFESSIONAL ENGINEER
FL LIC. # 55225

THOMAS J. SOTOS No 55225 STATE OF FLORIDA PROFESSIONAL ENGINEER

DATE OCT 19 2023

LAMSON INDUSTRIES, INC.
8501 N.W. 90 ST.
MEDLEY, FLORIDA 33166
PH No. (305) 696-8660

MANUFACTURER OF QUALITY ALUMINUM WINDOWS AND GLASS DOORS

SERIES-7700 SINGLE HUNG FLANGE FRAME IMPACT WINDOW

DESIGN PRESSURE CHARTS, & CONFIGURATION OPTIONS

Revision Notes:
B. Revised to Comply w/ 2014 FBC
C. Compliance w/ FBC 5th Edition (2014) and ASTM E1300-09
D. Revised to Comply w/ 2017 FBC
E. Revised to Comply w/ 2020 FBC
F. Added Glass Type #8 @ SHEET 4 OF 5
G. Revised to Comply w/ 2023 FBC

Drawn By: N. ERAZO | Date Drawn: 05-27-09
Revised By: N. Erazo | Date Revised: 09/22/23
Revision Level: G | Scale:
Product Reference Number: | Drawing Number: L7700-0901 | Sheet: 4 OF 5 | Revision #:

② FRAME SILL L-7702

(6063-T5 ALUMINUM)

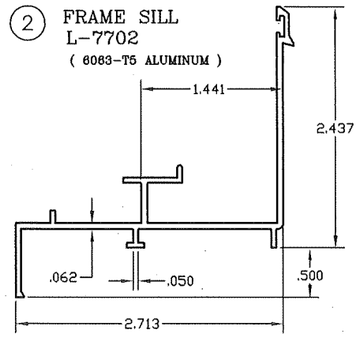

① FRAME HEAD L-7701

(6063-T5 ALUMINUM)

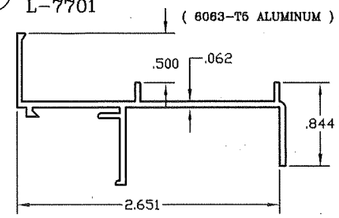

FIXED MEETING RAIL L-7704

④ (6063-T6 ALUMINUM)

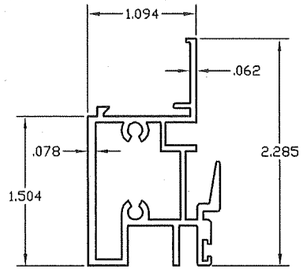

FRAME JAMB L-7703

③

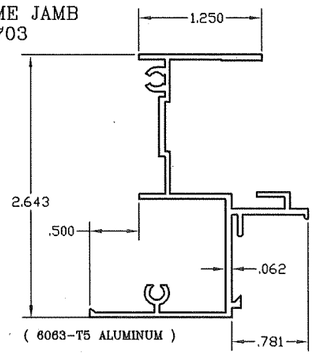

(6063-T5 ALUMINUM)

H.D. FIXED MEETING RAIL L-8302

㉙ (6063-T6 ALUMINUM)

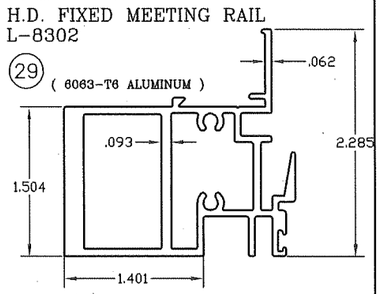

SILL ANCHOR CLIP L-8830

㉛

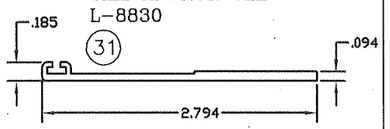

VENT INTERLOCK RAIL L-7705

⑤ (6063-T6 ALUMINUM)

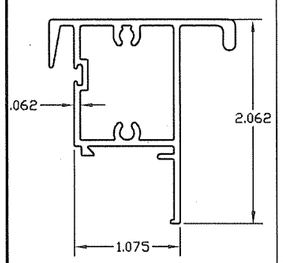

VENT BOTTOM RAIL L-7706

⑥ (6063-T6 ALUMINUM)

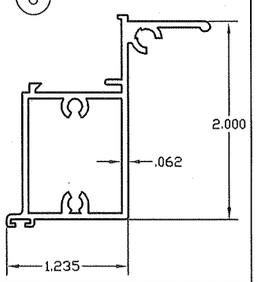

VENT JAMB RAIL L-7707

⑦ (6063-T6 ALUMINUM)

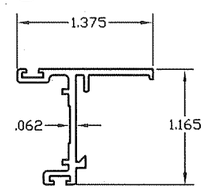

VENT SPRING LATCH L-7539

⑥ (6063-T5 ALUMINUM)

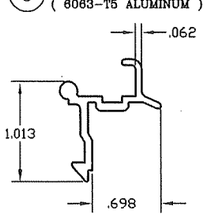

GLAZING BEAD L-7708

⑧ (6063-T5 ALUMINUM)

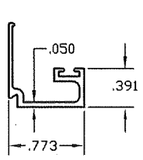

GLAZING BEAD L-7711

⑯ (6063-T5 ALUMINUM)

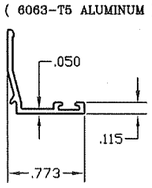

GLAZING BEAD L-4204

⑰ (6063-T5 ALUMINUM)

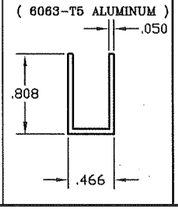

GLAZING BEAD L-4205

㉚ (6063-T5 ALUMINUM)

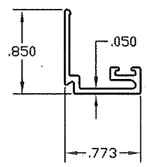

BILL OF MATERIALS

ITEM #	PART #	REQD.	DESCRIPTION	REMARKS
1	L-7801	1	FLANGE FRAME HEAD	6063-T6 ALUMINUM
2	L-7802	1	FLANGE FRAME SILL	6063-T6 ALUMINUM
3	L-7803	2	FLANGE FRAME JAMB	6063-T6 ALUMINUM
4	L-7704	1	FRAME FIXED MEETING RAIL	6063-T6 ALUMINUM
5	L-7705	1	VENT MEETING (TOP) RAIL	6063-T6 ALUMINUM
6	L-7706	1	VENT BOTTOM (LATCH) RAIL	6063-T6 ALUMINUM
7	L-7707	2	VENT JAMB (SIDE) RAIL	6063-T6 ALUMINUM
8	L-7708	AS REQ'D.	GLAZING BEAD (3/8')	6063-T5 ALUMINUM
9	FS-006	AS REQ'D.	ASSEMBLY SCREWS	#8 X 1' P.H. PHILLIPS
10	FS-040	AS REQD.	INSTALLATION SCREWS	#14 X 1 1/4' F.H./PHIL.
11	L-7531	AS REQ'D.	BULB VINYL WTS'P	1/4' DIA. BULB #3033
12	PWS-003	AS REQ'D.	FIN SEAL WEATHERSTRIP	.187'x.230'
13	PWS-005	AS REQ'D.	FIN SEAL WEATHERSTRIP	.187'x.350'
14	PWS-009	AS REQ'D.	FIN SEAL WEATHERSTRIP	.187'x.310'
15	HC-024-1	2	SELF ADHESIVE PILE PAD	1/4' X 1 1/2'
16	L-7711	AS REQ'D.	GLAZING BEAD/ INSULATED	6063-T5 ALUMINUM
17	L-4204	AS REQ'D.	GLAZING BEAD - RADIUS	6063-T5 ALUMINUM
18	L-7723	1	SASH BALANCE CAM/GUIDE	(2 X VENT)
19	L-7725	2	RIGID VINYL SASH STOP	(2 X FRAME)
20	L-7727	2	BLOCK & TACKLE BALANCE	BSI Balance Systems
21	L-7539	2	VENT LIFT LATCH	6063-T5 ALUMINUM
22	L-7523	1X LATCH	VENT LATCH SPRING	STAINLESS STEEL
23	*	AS REQ'D.	GLAZING SILICONE	SEE GLAZING @ SHT. 3
24	*	2	Laminated Glass	SEE GLAZING DETAILS
25	HC-057-1	2	VENT LIFT LATCH	MOLDED NYLON
26	HC-058-1	2	VENT SWEEP LATCH	MOLDED NYLON
27	*	2	FRAME SILL FOAM GASKET	SELF ADHESIVE
28	HC-026-1	1	SCREEN FRAME & MESH	
29	L-8302	1	H.D. FIXED MEETING RAIL	6063-T6 ALUMINUM
30	L-4205	AS REQ'D.	GLAZING BEAD (7/16')	6063-T5 ALUMINUM
31	L-8830	1 X Anchor	FAME SILL ANCHOR CLIP	6063-T5 ALUMINUM
32	L-7730	1	PRODUCT LABEL	
33 a	Trueseal	AS REQ'D.	INSULATED Swiggle Spacer	1/4' Air Space
33 b	Quanex	AS REQ'D.	INSULATED SuperSpacer	1/4' Air Space
33 c	Quanex	AS REQ'D.	INSULATED Duraseal	1/4' Air Space
34	SM-5504	AS REQ'D.	JOINT SEALANT	SM-5504
35	*	AS REQ'D.	PERIMETER ACRYLIC CAULK	OSI POLYSEAMSEAL

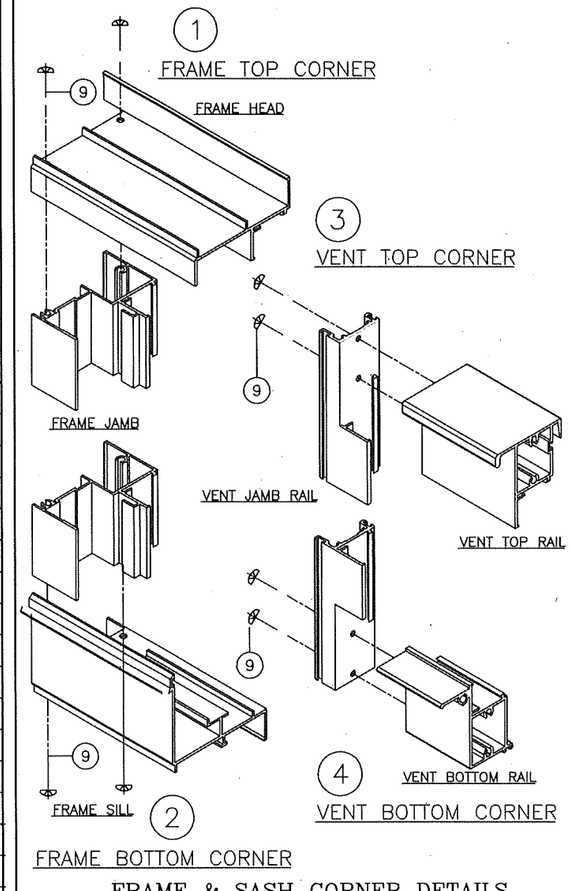

FRAME & SASH CORNER DETAILS

PRODUCT REVISED
As complying with the Florida Building Code
NOA-No. 23-1010.03
Expiration Date: 12/27/2026
By: Manuel Perez
Miami-Dade Product Control

THOMAS J. SOTOS
PROFESSIONAL ENGINEER
FL LIC. # 55225

THOMAS J. SOTOS LICENSE No 55225 STATE OF FLORIDA PROFESSIONAL ENGINEER

DATE OCT 04 2023

LAWSON INDUSTRIES, INC.
8501 N.W. 90 ST.
MEDLEY, FLORIDA 33166
PH No. (305) 696-8660

MANUFACTURER OF QUALITY ALUMINUM WINDOWS AND GLASS DOORS

SERIES-7700 SINGLE HUNG FLANGE FRAME IMPACT WINDOW

BILL OF MATERIALS, EXTRUSION DETAILS & CORNER ASSEMBLY DETAILS

Revision Notes:
B. Revised to Comply w/ 2014 FBC
C. Compliance w/ FBC 5th Edition (2014) and ASTM E1300-09
D. Revised to Comply w/ 2017 FBC
E. Revised to Comply w/ 2020 FBC
F. Added Glass Type #8 @ SHEET 4 OF 5
G. Revised to Comply w/ 2023 FBC

Drawn By: N. ERAZO	*Date Drawn:* 05-27-09	*Product Reference Number:*	*Drawing Number:* L7700-0901
Revised By: N. Erazo	*Date Revised:* 09/22/23	*Revision Level:* G	*Scale:*

Sheet: 5 OF 5 *Revision #:*